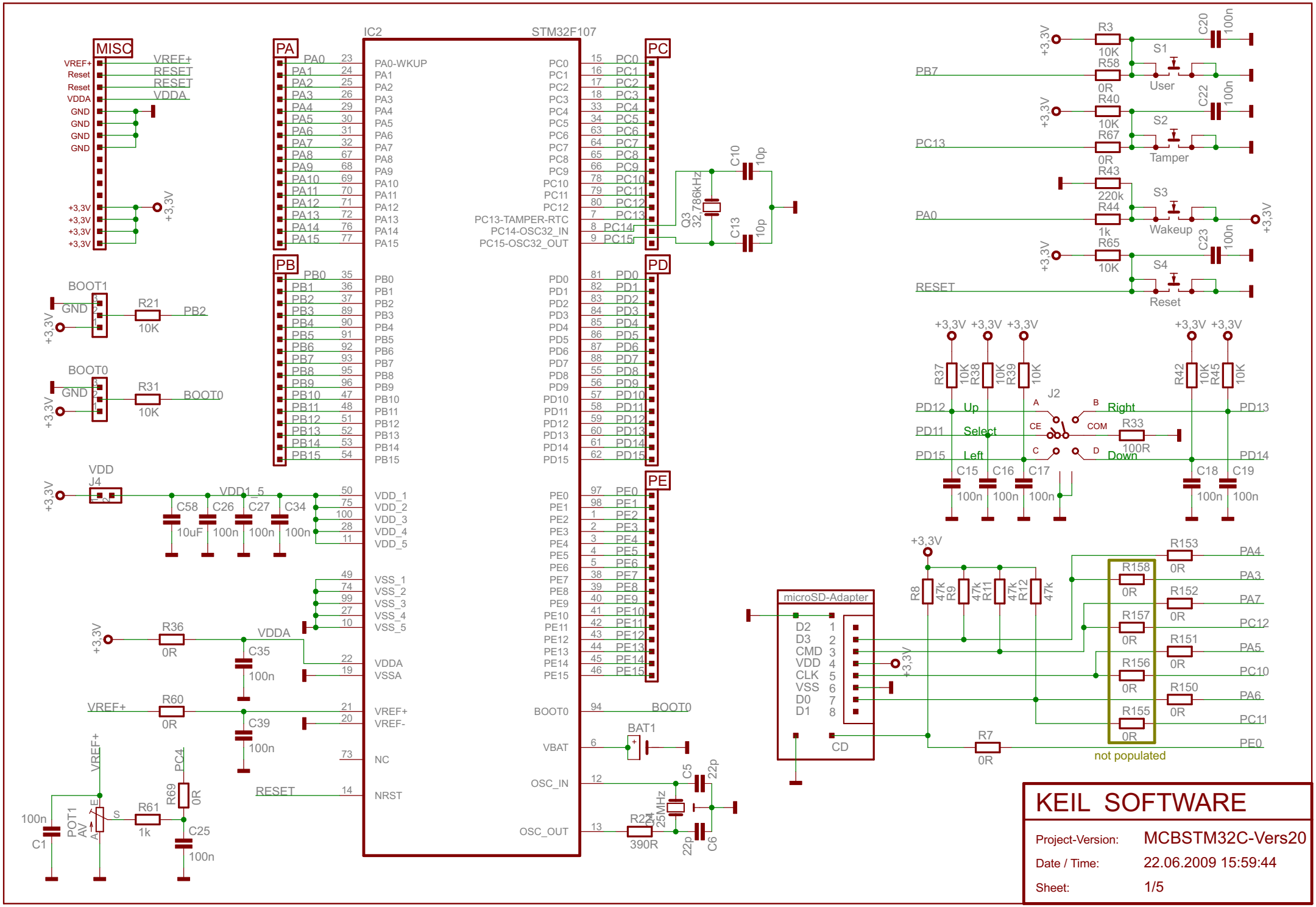

IC2
STM32F107
MISC
PA
PB
PC
PD
PE
PA0-WKUP
PC13-TAMPER-RTC
PC14-OSC32_IN
PC15-OSC32_OUT
VDD_1
VDD_2
VDD_3
VDD_4
VDD_5
VSS_1
VSS_2
VSS_3
VSS_4
VSS_5
VDDA
VSSA
VREF+
VREF-
NC
NRST
BOOT0
VBAT
OSC_IN
OSC_OUT
Q3
32,786kHz
C10
10p
C13
10p
BAT1
C5
22p
C6
22p
R24
390R
25MHz
BOOT1
BOOT0
R21
10K
R31
10K
VDD
J4
VDD1_5
C58
10uF
C26
100n
C27
100n
C34
100n
R36
0R
C35
100n
R60
0R
C39
100n
R61
1k
R69
0R
PC4
C25
100n
C1
100n
POT1
AV
R3
10K
R58
0R
R40
10K
R67
0R
R43
220k
R44
1k
R65
10K
S1
User
S2
Tamper
S3
Wakeup
S4
Reset
C20
100n
C22
100n
C23
100n
PB7
PC13
PA0
RESET
J2
Up
Select
Left
Right
Down
COM
CE
R33
100R
R37
10K
R38
10K
R39
10K
R42
10K
R45
10K
C15
100n
C16
100n
C17
100n
C18
100n
C19
100n
microSD-Adapter
D2
D3
CMD
VDD
CLK
VSS
D0
D1
CD
R8
47k
R9
47k
R11
47k
R12
47k
R7
0R
R153
0R
R158
0R
R152
0R
R157
0R
R151
0R
R156
0R
R150
0R
R155
0R
PA4
PA3
PA7
PC12
PA5
PC10
PA6
PC11
PE0
not populated
KEIL SOFTWARE
Project-Version: MCBSTM32C-Vers20
Date / Time: 22.06.2009 15:59:44
Sheet: 1/5

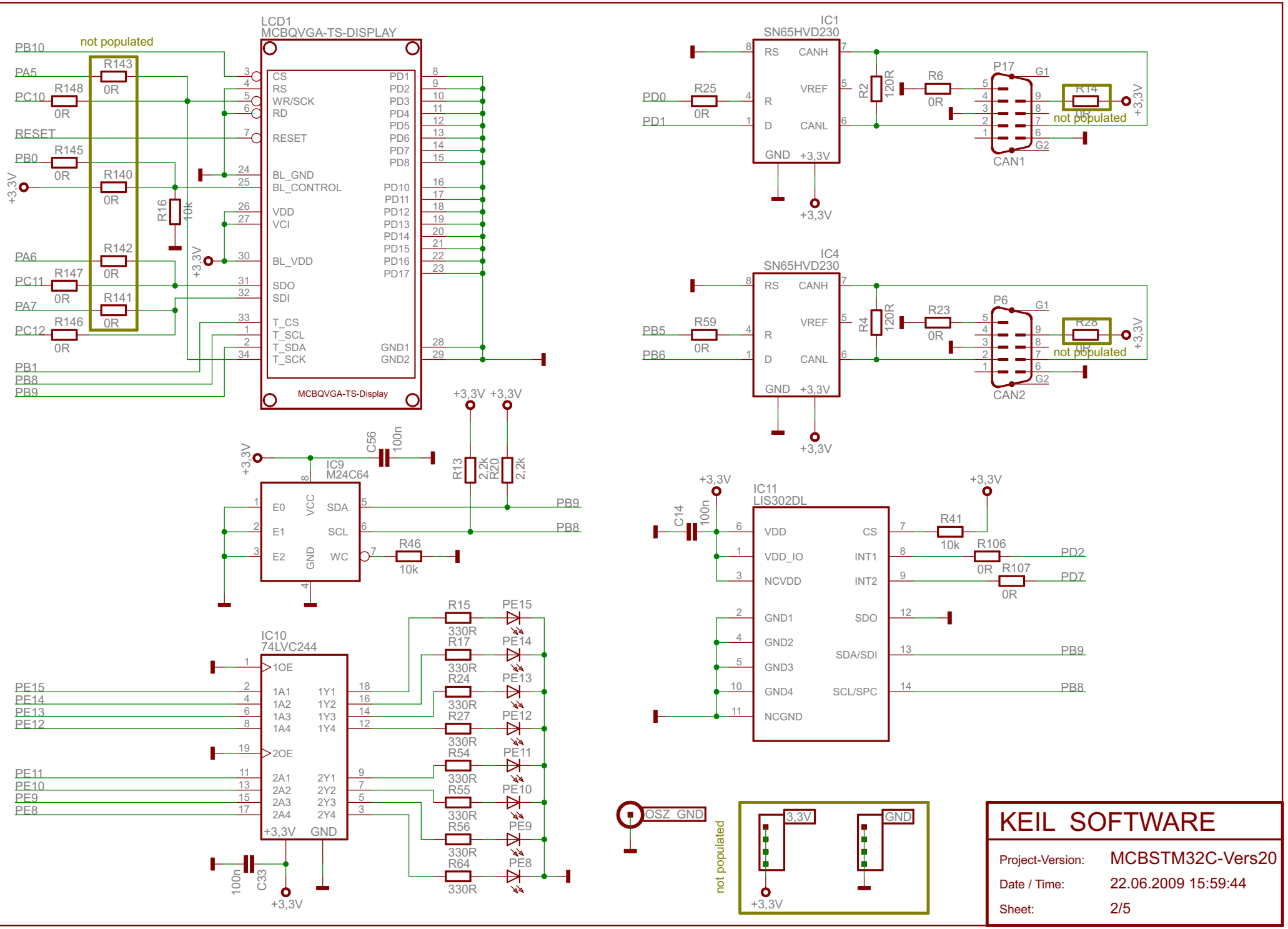
LCD1
MCBQVGA-TS-DISPLAY
not populated
PB10
PA5
PC10
RESET
PB0
PA6
PC11
PA7
PC12
R143
R148
R145
R140
R142
R147
R141
R146
0R
R16
10k
+3,3V
CS
RS
WR/SCK
RD
RESET
BL_GND
BL_CONTROL
VDD
VCI
BL_VDD
SDO
SDI
T_CS
T_SCL
T_SDA
T_SCK
PD1
PD2
PD3
PD4
PD5
PD6
PD7
PD8
PD10
PD11
PD12
PD13
PD14
PD15
PD16
PD17
GND1
GND2
PB1
PB8
PB9
MCBQVGA-TS-Display
IC1
SN65HVD230
RS
CANH
VREF
R
D
CANL
GND
+3,3V
PD0
PD1
R25
R2
120R
R6
P17
CAN1
R14
not populated
IC4
SN65HVD230
PB5
PB6
R59
R4
R23
P6
CAN2
R28
IC9
M24C64
E0
E1
E2
VCC
GND
SDA
SCL
WC
C56
100n
R13
2,2k
R20
R46
IC10
74LVC244
1OE
2OE
1A1
1A2
1A3
1A4
2A1
2A2
2A3
2A4
1Y1
1Y2
1Y3
1Y4
2Y1
2Y2
2Y3
2Y4
PE15
PE14
PE13
PE12
PE11
PE10
PE9
PE8
R15
R17
R24
R27
R54
R55
R56
R64
330R
C33
IC11
LIS302DL
VDD
VDD_IO
NCVDD
GND1
GND2
GND3
GND4
NCGND
CS
INT1
INT2
SDO
SDA/SDI
SCL/SPC
C14
R41
R106
R107
PD2
PD7
PB9
PB8
OSZ GND
not populated
3,3V
GND
KEIL SOFTWARE
Project-Version: MCBSTM32C-Vers20
Date / Time: 22.06.2009 15:59:44
Sheet: 2/5

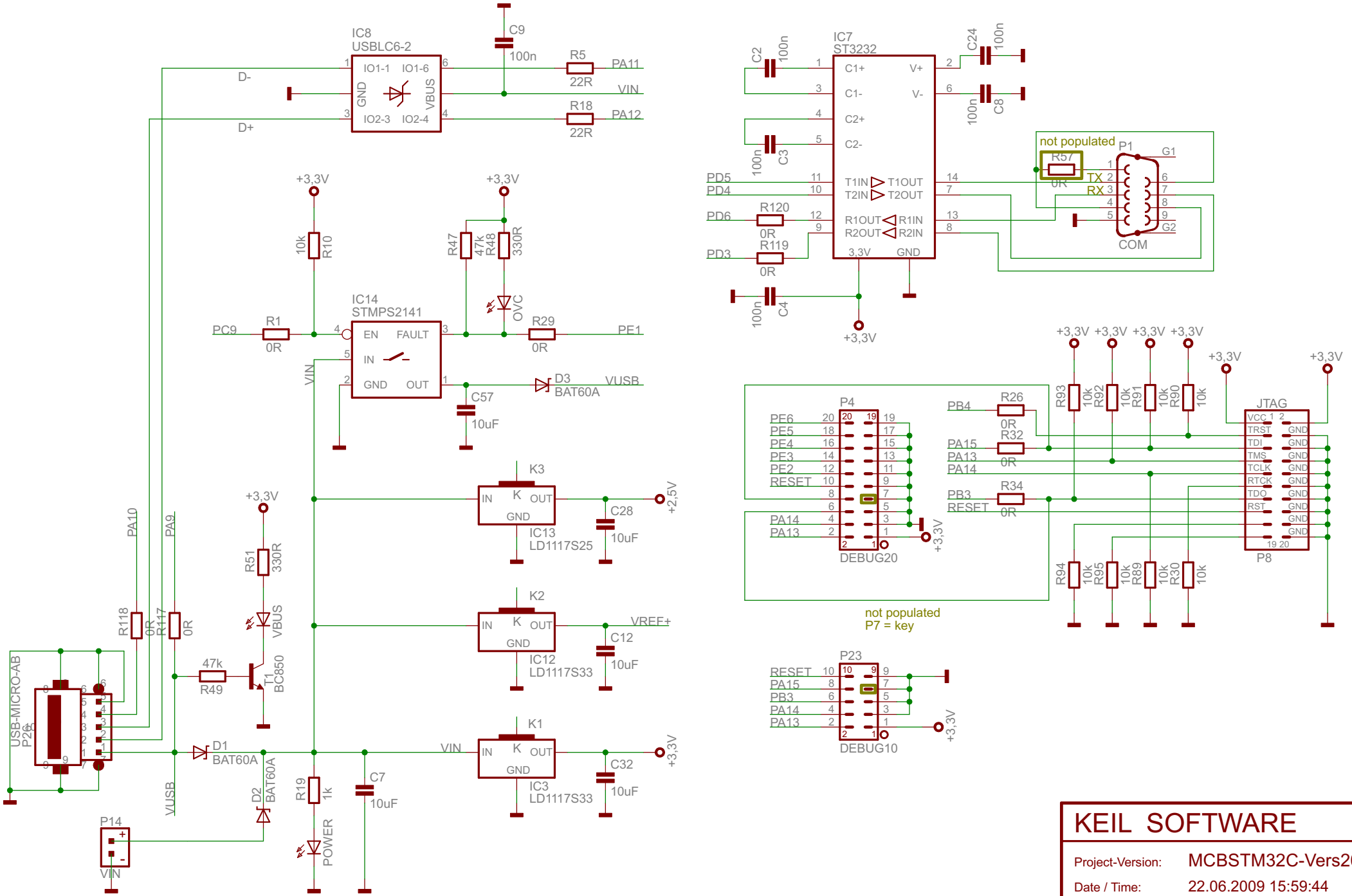

KEIL SOFTWARE

Project-Version:	MCBSTM32C-Vers20
Date / Time:	22.06.2009 15:59:44
Sheet:	3/5

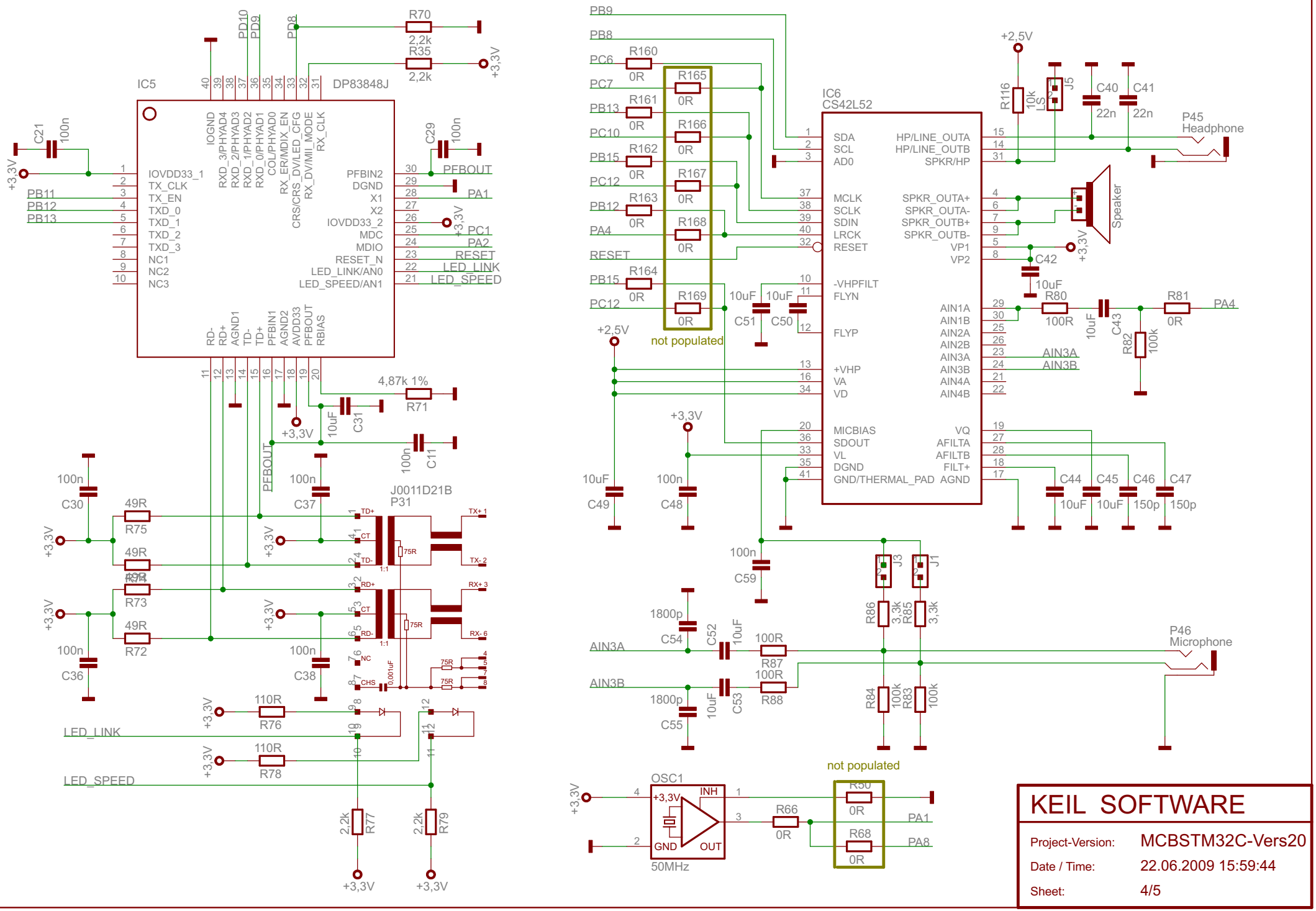
IC5
DP83848J
IC6
CS42L52
J0011D21B
P31
OSC1
50MHz
not populated
not populated
Speaker
P45
Headphone
P46
Microphone
LED_LINK
LED_SPEED
KEIL SOFTWARE
Project-Version: MCBSTM32C-Vers20
Date / Time: 22.06.2009 15:59:44
Sheet: 4/5

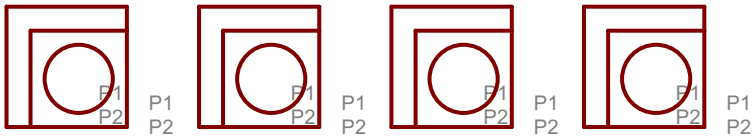
P1
P2
P1
P2
P1
P2
P1
P2
P1
P2
P1
P2
P1
P2
P1
P2